January 2020
www.taegutec.com
1/9

NPN

New Product News

new

Speed to Feed

COOLBURST
PINPOINTED COOLANT

RHINO-TURN T-holder with Internal Pinpointed High-Pressure Coolant

ADVANCEMACHINING
TaeguTec Industry 4.0

INDUSTRY 4.0 TaeguTec
Member IMC Group

KEY POINT

TaeguTec introduces the COOL-BURST T-holder to the RHINO-TURN line

The **COOL-BURST** is a very efficient internal pinpointed high-pressure coolant supplying system that shoots directly to the cutting edge. TaeguTec developed the **COOL-BURST** RHINO-TURN T-holder for effective coolant supply directly to the cutting edge of the rake face and flank face through both the upper and lower coolant channels. This results in optimal chip control, short chip breaking and stability with improved tool life even under higher feed and speed conditions for better productivity. Unlike the conventional lever type internal coolant supply holders, the coolant flows directly from the top clamp without any additional components, which can be applied up to 140 bar.

COOL-BURST T-holders are suitable in the machining of heat-resistant alloys such as inconel alloy, titanium alloy and difficult-to-cut materials such as stainless steel.

Features

- 50% tool life increase under the same machining conditions
  - Improved tool life for machining of titanium, stainless steel, alloy steel and super alloys
- 20% cutting speed increase in difficult-to-cut materials machining
  - Increased productivity in high-speed machining of titanium and super alloys
- Pinpointed high-pressure coolant supply through the clamp without additional components
- T-Holder type for better stability and robust tightening than the conventional lever type
- Coolant pressure: Recommended 70 bar, Maximum up to 140 bar
  - Excellent chip control
  - Efficient cooling of the insert's cutting edge with coolant supply via two directions

TCLNR/L-TB

COOLBURST

T- Holders with high-pressure coolant

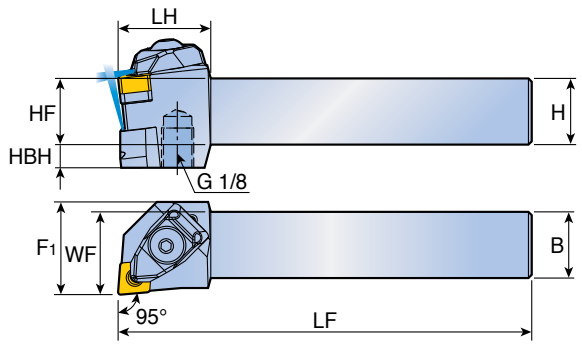

TCLNR-TB

Approach angle	Designation		Dimension (mm)								Insert
			H	HF	B	LF	LH	WF	HBH	F1	
95°	✓ TCLNR/L	2020 K0904-TB	20	20	20	125	28	25	7	28	CN... 0904...
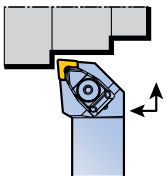		2525 M0904-TB	25	25	25	150	28	32	7	32	

• ✓ Marked: For RHINO-TURN insert

Spare parts

Designation	Clamp	Clamp screw	Spring	Upper O-ring	Lower O-ring	Shim	Shim screw	Wrench	
TCLNR/L-TB	DLM 3-NX-TB	BH M4x0.7x 16-TB	DSP 3	O-RING ID4.47x 1.78	O-RING ID6.07x 1.78	LSC 32A	SO 40085I	L-W 3	T 15

TDJNR/L-TB

COOLBURST

T- Holders with high-pressure coolant

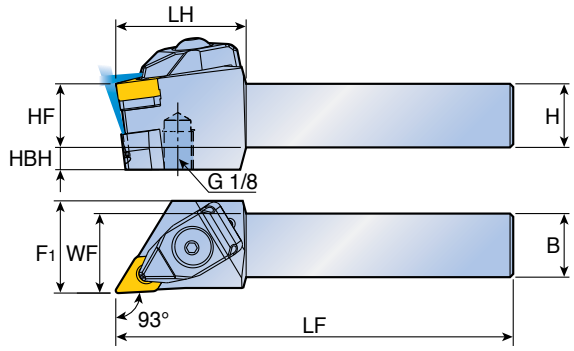

TDJNR-TB

Approach angle	Designation		Dimension (mm)								Insert
			H	HF	B	LF	LH	WF	HBH	F_1	
93°	✓ **TDJNR/L**	**2020 K1305-TB**	20	20	20	125	41	25	7	29	DN... 1305...
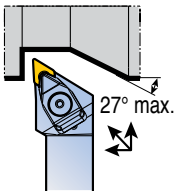		**2525 M1305-TB**	25	25	25	150	41	32	7	32	

- ✓ Marked: For RHINO-TURN insert

Spare parts

Designation	Clamp	Clamp screw	Spring	Upper O-ring	Lower O-ring	Shim	Shim screw	Wrench	
								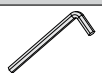	
2020...-TB	DLM 3.5-NX-TB	BH M5x0.8x 21-MO-TB	DSP 4	O-RING ID5.28x 1.78	O-RING ID7.59x 2.62	LSD 3.52	SO 50090I-MO	L-W 3	T 20
2525...-TB	DLM 3.5-NX-TB	BH M5x0.8x 21-MO-TB	DSP 4	O-RING ID5.28x 1.78	O-RING ID7.59x 2.62	LSD 3.52	SO 50090I	L-W 3	T 20

TVJNR/L-TB

COOLBURST

T- Holders with high-pressure coolant

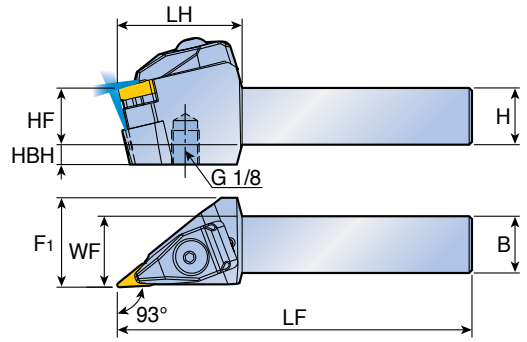

TVJNR-TB

Approach angle	Designation		Dimension (mm)								Insert
			H	HF	B	LF	LH	WF	HBH	F_1	
93°	✓ **TVJNR/L**	**2020 K1304-TB**	20	20	20	125	44	25	7	31.5	VN...X 1304…
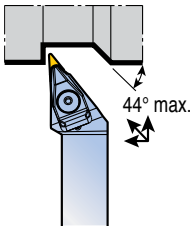		**2525 M1304-TB**	25	25	25	150	44	32	7	32.0	

- ✓ Marked: For RHINO-TURN insert

Spare parts

Designation	Clamp	Clamp screw	Spring	Upper O-ring	Lower O-ring	Shim	Shim screw	Wrench	
TVJNR/L-TB	DLM 2.5V-NX-TB	BH M5x0.8x 25-TB	DSP 4	O-RING ID5.28x 1.78	O-RING ID7.59x 2.62	MSVI 2.522	SO 40085I	L-W 3	T 15

TWLNR/L-TB

COOLBURST

T- Holders with high-pressure coolant

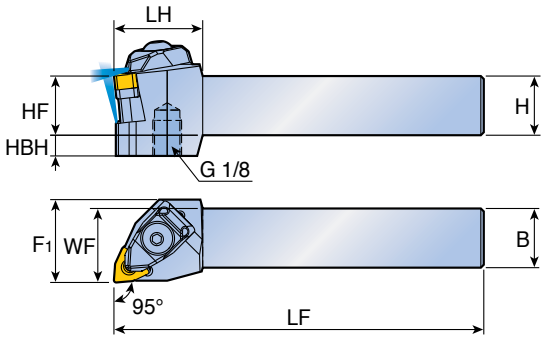

TWLNR-TB

Approach angle	Designation	Dimension (mm)								Insert
		H	HF	B	LF	LH	WF	HBH	F_1	
95°	✓ TWLNR/L 2020 K0604-TB	20	20	20	125	30	25	7	28	WN...X 0604…
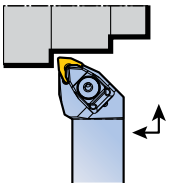	2525 M0604-TB	25	25	25	150	30	32	7	32	

• ✓ Marked: For RHINO-TURN insert

Spare parts

Designation	Clamp	Clamp screw	Spring	Upper O-ring	Lower O-ring	Shim	Shim screw	Wrench	
TWLNR/L-TB	DLM 3-NX-TB	BH M4x0.7x 16-TB	DSP 3	O-RING ID4.47x 1.78	O-RING ID6.07x 1.78	LSW 32A	SO 40085I	L-W 3	T 15

TXJNR/L-TB

COOLBURST

T-Holders with high-pressure coolant

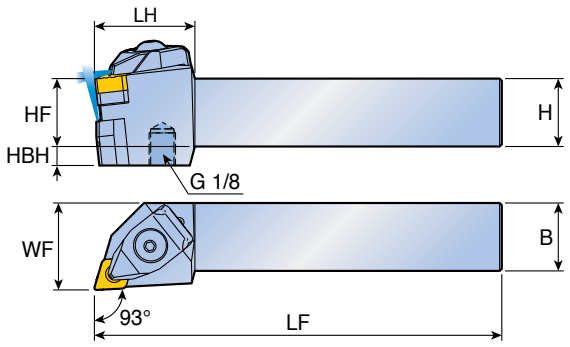

TXJNR-TB

Approach angle	Designation	Dimension (mm)							Insert
		H	HF	B	LF	LH	WF	HBH	
93°	◈ TXJNR/L 2525 M0904-TB	25	25	25	150	30	32	7	XNMG 0904...
	2525 M1105-TB	25	25	25	150	37	32	7	XNMG 1105...

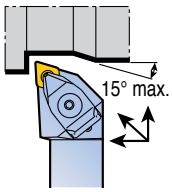

- ◈ Marked: For RHINO-X-TURN insert

Spare parts

Designation	Clamp	Clamp screw	Spring	Upper O-ring	Lower O-ring	Shim	Shim screw	Wrench	
								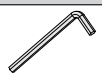	
...0904...	DLM 3-NX-TB	BH M4x0.7x 16-TB	DSP 3	O-RING ID4.47x 1.78	O-RING ID6.07x 1.78	TSX 2.73	SO 40085I	L-W 3	T 15
...1105...	DLM 3.5-NX-TB	BH M5x0.8x 21-MO-TB	DSP 4	O-RING ID5.28x 1.78	O-RING ID7.59x 2.62	TSX 3.53	SO 50090I	L-W 3	T 20

A-TCLNR/L-TB

COOLBURST

T-Holder type boring bars with high-pressure coolant

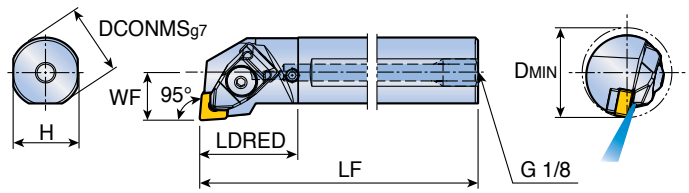

A-TCLNR-TB

Approach angle	Designation	Dimension (mm)						Insert
		DCONMS	H	LF	LDRED	WF	DMIN	
95°	✓ **A25R TCLNR/L 0904-TB**	25	23	200	35	17	32	CN... 0904...
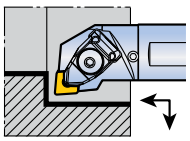	✓ **A32S TCLNR/L 0904-TB**	32	30	250	35	22	40	

• ✓ Marked: For RHINO-TURN insert

Spare parts

Designation	Clamp	Clamp screw	Spring	Upper O-ring	Lower O-ring	Shim	Shim screw	Wrench	
A-TCLNR/L-TB	DLM 3-NX-TB	BH M4x0.7x 16-TB	DSP 3	O-RING ID4.47x 1.78	O-RING ID6.07x 1.78	LSC 32	SO 40073I	L-W 3	T 15

KIT COLLECTIONS

These kit products are available in the format listed below.

Cat. No.	Designation	Bill of materials	Qty.
6334742	**KISFT-TCLNR 25 TB-CN0904**	TCLNR 2525 M0904-TB	1
		CNMG 090408 MK TT3020	3
6334743	**KISFT-TDJNR 25 TB-DN1305**	TDJNR 2525 M1305-TB	1
		DNMG 130508 MK TT3020	3
6334744	**KISFT-TVJNR 25 TB-VN1304**	TVJNR 2525 M1304-TB	1
		VNMX 130408 MK TT5080	3
6334745	**KISFT-TWLNR 25 TB-WN0604**	TWLNR 2525 M0604-TB	1
		WNMX 060408 MK TT5080	3
6336543	**KISFT-TXJNR 25 TB-XN0904**	TXJNR 2525 M0904-TB	1
		XNMG 090404 FLP TT8115	3
6336544	**KISFT-TXJNR 25 TB-XN1105**	TXJNR 2525 M1105-TB	1
		XNMG 110508 MLP TT8125	3

Cat. No.	Designation	Bill of materials	Qty.
6334755	**KISFS-TCLNR 25 TB-CN0904**	TCLNR 2525 M0904-TB	1
		CNMG 090408 MK TT3020	30
6334756	**KISFS-TDJNR 25 TB-DN1305**	TDJNR 2525 M1305-TB	1
		DNMG 130508 MK TT3020	30
6334757	**KISFS-TVJNR 25 TB-VN1304**	TVJNR 2525 M1304-TB	1
		VNMX 130408 MK TT5080	30
6334758	**KISFS-TWLNR 25 TB-WN0604**	TWLNR 2525 M0604-TB	1
		WNMX 060408 MK TT5080	30
6337833	**KISFS-TXJNR 25 TB-XN0904**	TXJNR 2525 M0904-TB	1
		XNMG 090404 FLP TT8115	30
6337834	**KISFS-TXJNR 25 TB-XN1105**	TXJNR 2525 M1105-TB	1
		XNMG 110508 MLP TT8125	30