April 2023
www.taegutec.com
1/10

NPN

New Product News

new

Higher Rigidity BT FC Type Arbor Line

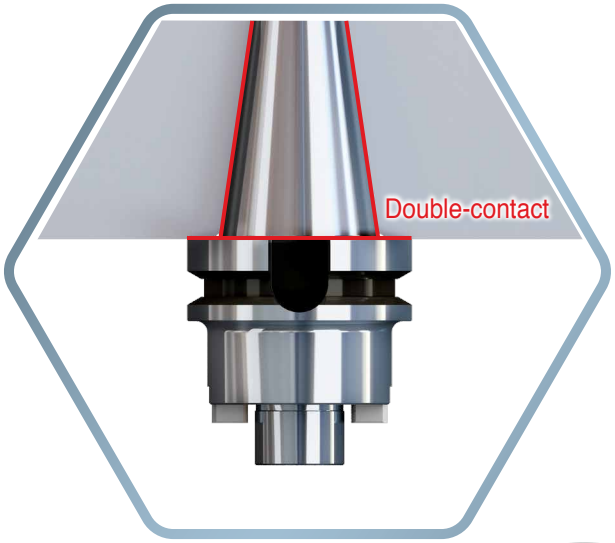

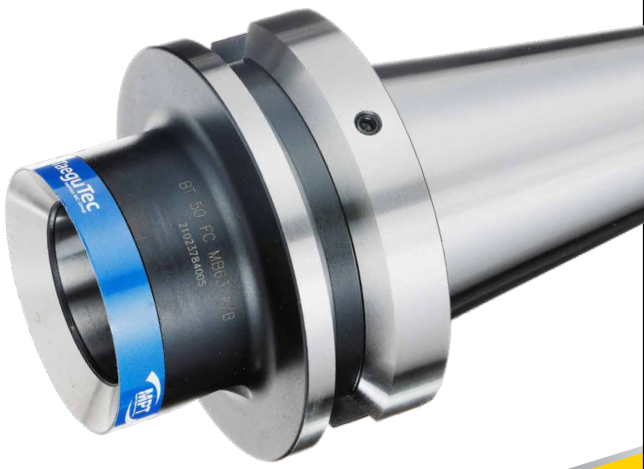

ADVANCE CUTTING
TaeguTec

TaeguTec
Member IMC Group

KEY POINT

TaeguTec introduces a higher stability BT FC arbor series including both a taper and face contact.

Many Korean and Japanese manufacturers of double-contact spindles currently sell BT FC type arbors globally, both featuring tapers and face contacts to improve stability. To maintain competitiveness in these market trends and demands, TaeguTec supplies BT FC arbors including face contact as standard items.

As these BT FC arbors are compatible with the BIG+ machine spindles, they enable excellent rigidity and higher precision because of their machining capability even under long overhang or high-load machining conditions.

For further details, please contact the product manager.

Features

- Strong clamping rigidity
- Enables cutting edge repeatability within 0.002 mm
- Improved radial load capacity due to the larger spindle contact area versus conventional arbors
- Excellent machining performance even under harsh cutting or long overhang machining conditions
- Increased tool life and spindle duration

Face contact BT FC series

Collet chucks	End mill holders	Thermal shrinking chucks		Face mill arbors		MPT system
BT-FC-ER	BT-FC-EM	BT-FC-SRKIN	BT-FC-SRK	BT-FC-SEM-C	BT-FC-FM	BT-FC-MB

Conventional BT arbor

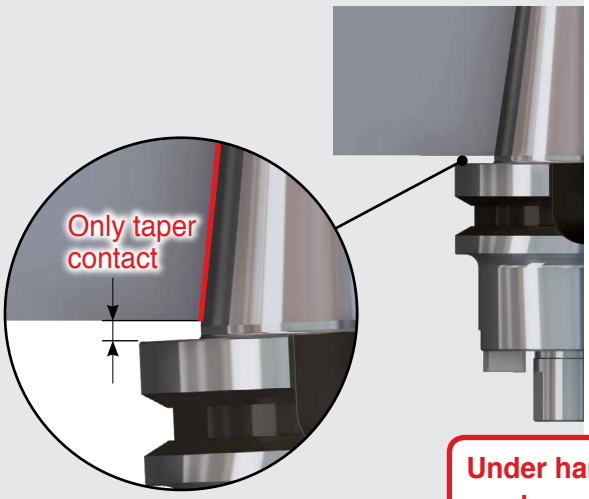

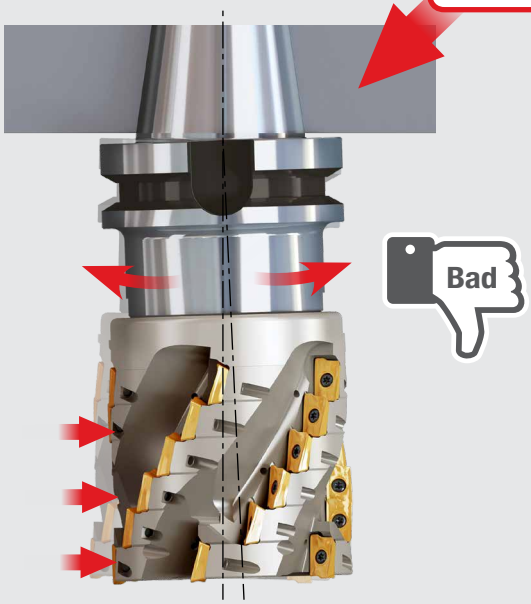

Unstable machining such as warping, vibration, and noise
➔ Inadequate roughness and dimensions or tool breakage

Face Contact BT FC arbor

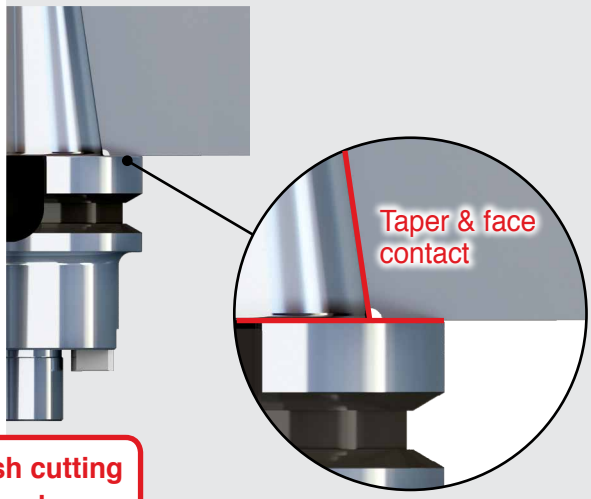

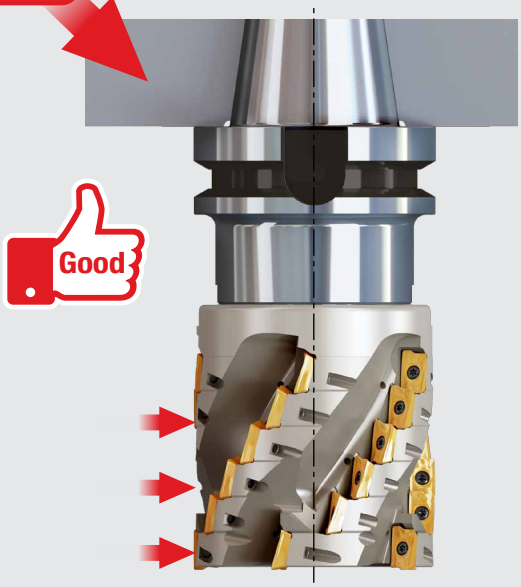

Higher stability machining due to the stronger clamping feature

Under harsh cutting or long overhang machining conditions

BT-FC-ER

ER collet chucks

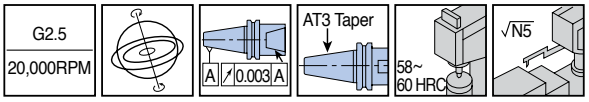

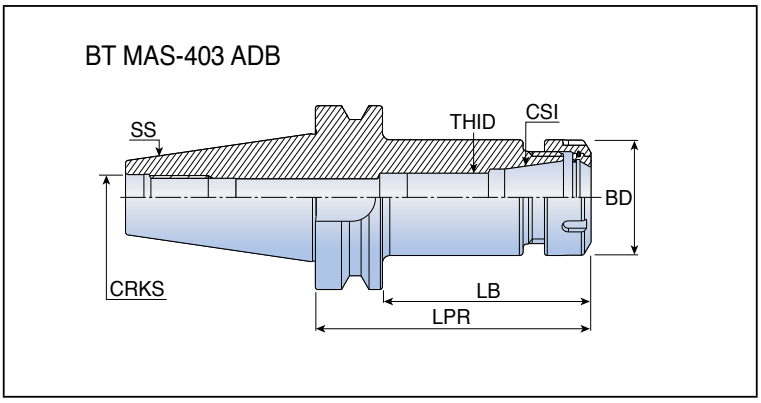

	Designation	Dimension (mm)									Kg
		SS	CSI	DCONNWS	DCONXWS	BD	LPR	LB	CRKS	THID	
BT30	**FC ER16X70**	30	ER16	0.5	10.0	28	70	48	M12	M10	0.6
	FC ER16X100	30	ER16	0.5	10.0	28	100	79	M12	M10	0.61
	FC ER20X70	30	ER20	1.0	13.0	34	70	48	M12	M12	0.51
	FC ER25X60	30	ER25	1.0	16.0	42	60	38	M12	M16	0.47
	FC ER32X60	30	ER32	2.0	20.0	50	60	38	M12	M18	0.46
BT40	**FC ER16X70**	40	ER16	0.5	10.0	28	70	44	M16	M12	1.05
	FC ER16X100	40	ER16	0.5	10.0	28	100	74	M16	M12	1.17
	FC ER32X60	40	ER32	2.0	20.0	50	60	34	M16	M22X1.5	0.92
	FC ER32X100	40	ER32	2.0	20.0	50	100	74	M16	M22X1.5	1.54
	FC ER40X80	40	ER40	3.0	26.0	63	80	54	M16	M28X1.5	1.09
BT50	**FC ER16X100**	50	ER16	0.5	10.0	28	100	63.5	M24	M12	3.91
	FC ER16X150	50	ER16	0.5	10.0	28	150	113.5	M24	M12	3.96
	FC ER32X100	50	ER32	2.0	20.0	50	100	63.5	M24	M22X1.5	3.98
	FC ER32X150	50	ER32	2.0	20.0	50	150	113.5	M24	M22X1.5	4.65
	FC ER40X100	50	ER40	3.0	26.0	63	100	63.5	M24	M28X1.5	4.03
	FC ER40X150	50	ER40	3.0	26.0	63	150	113.5	M24	M28X1.5	5.6

BT-FC-EM

End mill holders

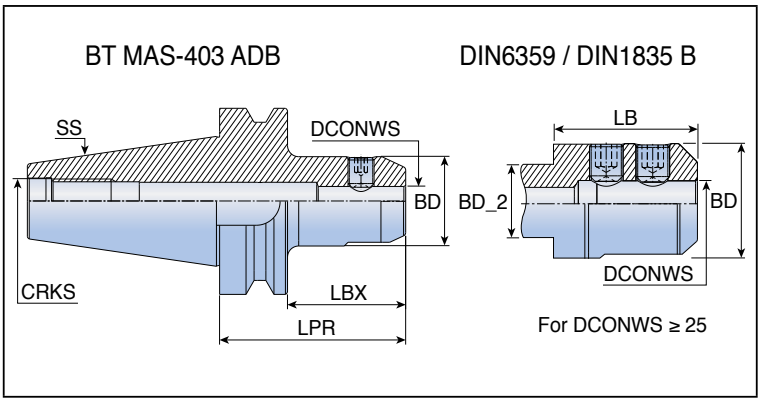

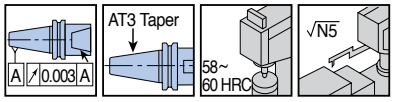

	Designation	Dimension (mm)								Kg
		SS	DCONWS	BD	BD_2	LPR	LBX	LB	CRKS	
BT30	**FC EM12X60**	30	12	42	-	60	38	-	M12	0.73
	FC EM16X60	30	16	45.9	-	60	38	-	M12	0.8
	FC EM20X80	30	20	52	44.4	80	58	48	M12	1.04
BT40	**FC EM10X65**	40	10	35	-	65	39	-	M16	1.25
	FC EM12X65	40	12	42	-	65	39	-	M16	1.29
	FC EM16X65	40	16	48	-	65	39	-	M16	1.37
	FC EM20X75	40	20	52	-	75	49	-	M16	1.56
	FC EM25X105	40	25	65	61	105	79	68	M16	2.54
	FC EM32X110	40	32	71	61	110	83	73	M16	1.87
BT50	**FC EM12X100**	50	12	42	-	100	62	-	M24	4.25
	FC EM16X100	50	16	48	-	100	63.5	-	M24	4.22
	FC EM20X100	50	20	52	-	100	63.5	-	M24	4.33
	FC EM25X115	50	25	65	-	115	78.5	-	M24	5.36
	FC EM32X115	50	32	71	-	115	78.5	-	M24	5.38
	FC EM40X115	50	40	90	-	115	78.5	-	M24	6.29
	FC EM50X125	50	50	100	-	125	87	-	M24	3.24

BT-FC-SRKIN

Thermal shirinking chucks

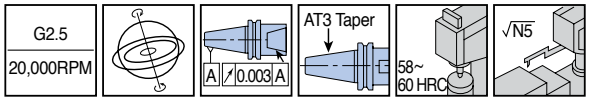

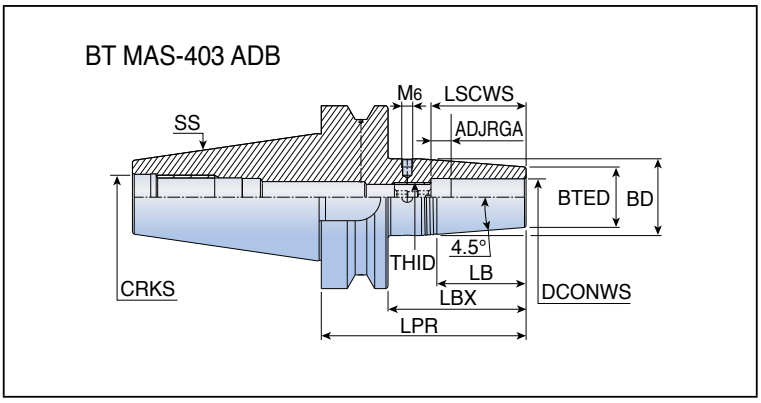

Designation		Dimension (mm)											Hex key	Kg
		SS	DCONWS	BTED	BD	LPR	LBX	LB	ADJRGA	LSCWS	THID	CRKS		
BT40 FC	**SRKIN 6X90**	40	6	21	27	90	64	38	11	36	M5	M16	2.5	1.16
	SRKIN 8X90	40	8	21	27	90	64	38	11	36	M6	M16	3.0	1.14
	SRKIN10X90	40	10	24	32	90	64	50.8	11	42	M8	M16	4.0	1.29
	SRKIN12X90	40	12	24	32	90	64	50.8	11	47	M10	M16	5.0	1.28
	SRKIN14X90	40	14	27	34	90	64	44.5	11	47	M10	M16	5.0	1.32
	SRKIN16X90	40	16	27	34	90	64	44.5	11	50	M12	M16	6.0	1.31
	SRKIN18X90	40	18	33	42	90	64	57.2	11	50	M12	M16	6.0	3
	SRKIN20X90	40	20	33	42	90	64	57.2	11	52	M16	M16	8.0	1.43
	SRKIN25X110	40	25	44	53	110	84	57.2	11	58	M16	M16	8.0	2.03
BT50 FC	**SRKIN 6X100**	50	6	21	27	100	63.5	38	11	36	M6	M24	2.5	13.99
	SRKIN 8X100	50	8	21	27	100	63.5	38	11	36	M5	M24	3.0	3.86
	SRKIN10X100	50	10	24	32	100	63.5	50.8	11	42	M8	M24	4.0	10
	SRKIN12X100	50	12	24	32	100	63.5	50.8	11	47	M10	M24	5.0	3.73
	SRKIN14X100	50	14	27	34	100	63.5	44.5	11	47	M10	M24	5.0	10
	SRKIN16X100	50	16	27	34	100	63.5	44.5	11	50	M12	M24	6.0	3.76
	SRKIN20X100	50	20	33	42	100	63.5	57.2	11	52	M16	M24	8.0	3.87
	SRKIN25X120	50	25	44	53	120	83.5	57.2	11	58	M16	M24	8.0	4.47
	SRKIN32X120	50	32	44	53	120	83.5	57.2	11.5	62	M16	M24	8.0	10

BT-FC-SRK

Thermal shirinking chucks

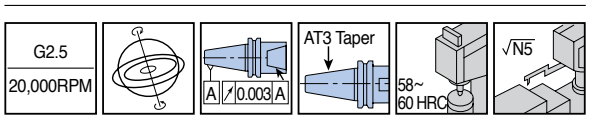

BT MAS-403 ADB

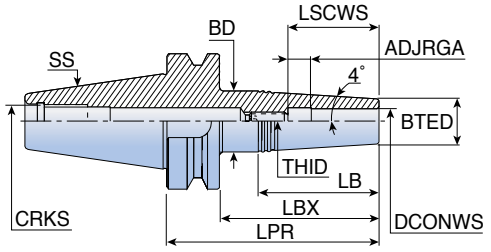

Designation		Dimension (mm)											Hex key	Kg
		SS	DCONWS	BTED	BD	LPR	LBX	LB	ADJRGA	LSCWS	THID	CRKS		
BT30 FC	**SRK 3X50**	30	3	9.93	15	72	50	36.3	0	10	M6	M12	3.0	0.32
	SRK 4X50	30	4	9.93	15	72	50	36.3	0	12	M6	M12	3.0	0.46
	SRK 6X50	30	6	10.88	16	72	50	36.6	0	18	M8	M12	4.0	0.52
	SRK 8X50	30	8	13.95	20	72	50	43.3	0	25	M10	M12	5.0	0.48
	SRK12X50	30	12	20.03	26	72	50	42.7	10	42	M10	M12	5.0	0.53

BT-FC-SEM-C

Face mill arbors with internal coolant hole

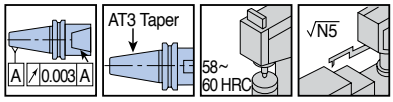

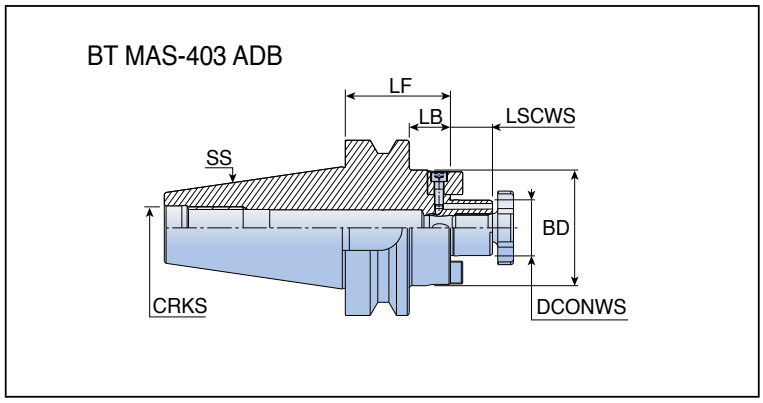

	Designation	Dimension (mm)							Kg
		SS	DCONWS	BD	LF	LB	LSCWS	CRKS	
BT30 FC	**SEM16X50C**	30	16	38	50	28	17	M12	0.62
	SEM22X50C	30	22	47	50	28	19	M12	0.77
	SEM27X50C	30	27	58	50	28	21	M12	0.88
BT40 FC	**SEM16X60C**	40	16	38	60	34	17	M16	1.24
	SEM22X60C	40	22	47	60	34	19	M16	1.42
	SEM22X120C	40	22	47	120	94	19	M16	2.35
	SEM27X45C	40	27	58	45	19	21	M16	1.45
	SEM32X60C	40	32	66	60	34	24	M16	1.88
	SEM32X78X60C	40	32	78	60	34	24	M16	2.25
BT50 FC	**SEM16X75C**	50	16	38	75	38.5	17	M24	4.07
	SEM16X120C	50	16	38	120	83.5	17	M24	4.43
	SEM22X75C	50	22	47	75	38.5	19	M24	1.2
	SEM22X120C	50	22	47	120	83.5	19	M24	4.85
	SEM27X60C	50	27	58	60	23.5	21	M24	4.3
	SEM27X105C	50	27	58	105	68.5	21	M24	5
	SEM32X60 C	50	32	66	60	23.5	24	M24	1.29
	SEM32X78X60C	50	32	78	60	23.5	24	M24	4.61
	SEM40X60 C	50	40	82	60	11.5	27	M24	4.32

BT-FC-FM

Face mill arbors

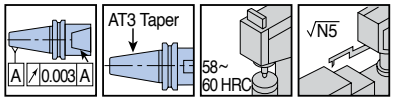

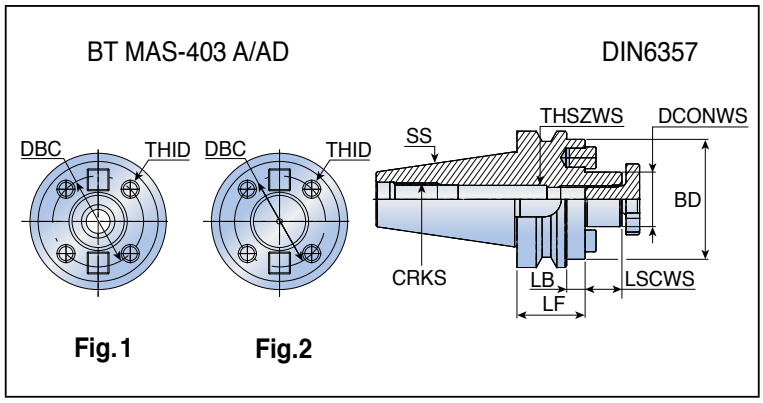

Designation		Dimension (mm)										Fig.	Kg
		SS	DCONWS	BD	DBC	LF	LB	LSCWS	CRKS	THID	THSZWS		
BT40	**FC FM40**(1)	40	40	88	66.7	60	23	27	M16	M12	M20	1	2.39
BT50	**FC FM40**(1)	50	40	88	66.7	50	13.5	27	M24	M12	M20	1	4.5
	FC FM60(2)	50	60	128	101.6	88	41.5	40	M24	M16	-	2	9.45

- Wrench not included
- (1) Form AD
- (2) Form A

BT-FC-MB

MPT system

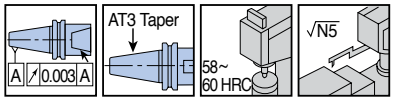

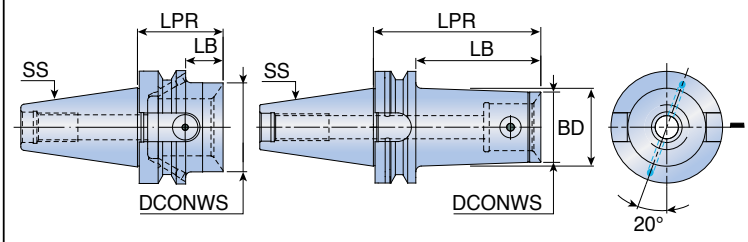

Designation		Dimension (mm)						Fig.	Kg
		SS	DCONWS	LPR	BD	LB	CRKS		
BT40	**FC MB50**	40	50	48	-	21	M16	1	0.9
	FC MB50X120 ADB	40	50	120	-	93	M16	2	1.9
	FC MB63	40	63	66	-	-	M16	1	1.2
BT50	**FC MB50**	50	50	66	-	28	M24	1	3.3
	FC MB50X120 ADB	50	50	120	60	82	M24	2	4.2
	FC MB63	50	63	75	-	37	M24	1	3.7
	FC MB63X150 ADB	50	63	150	70	112	M24	2	5.8
	FC MB80	50	80	75	-	37	M24	1	4
	FC MB80X180 ADB	50	80	180	-	142	M24	2	7.5